Available Product Colors:

White
(WHT)

Coffee Bag

Item#: 1CFB0307***

**** Insert color code*

Size: 3.5(w) x 2.5(g) x 7.75(h)

Imprint Area: 2x3

PO#:

Imprint Size:

Imprint Color:

Product Color:

Location 1

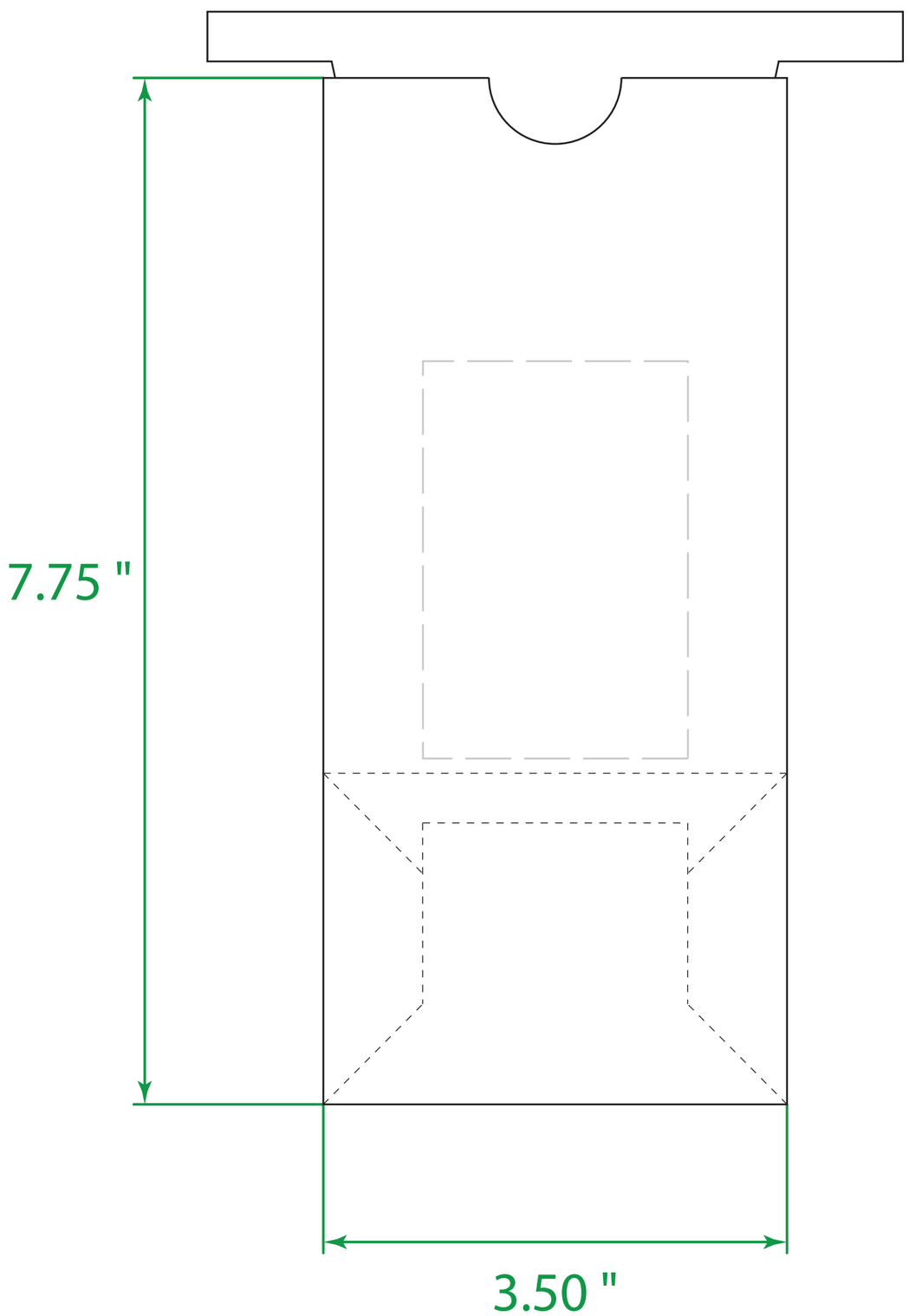

Location 2

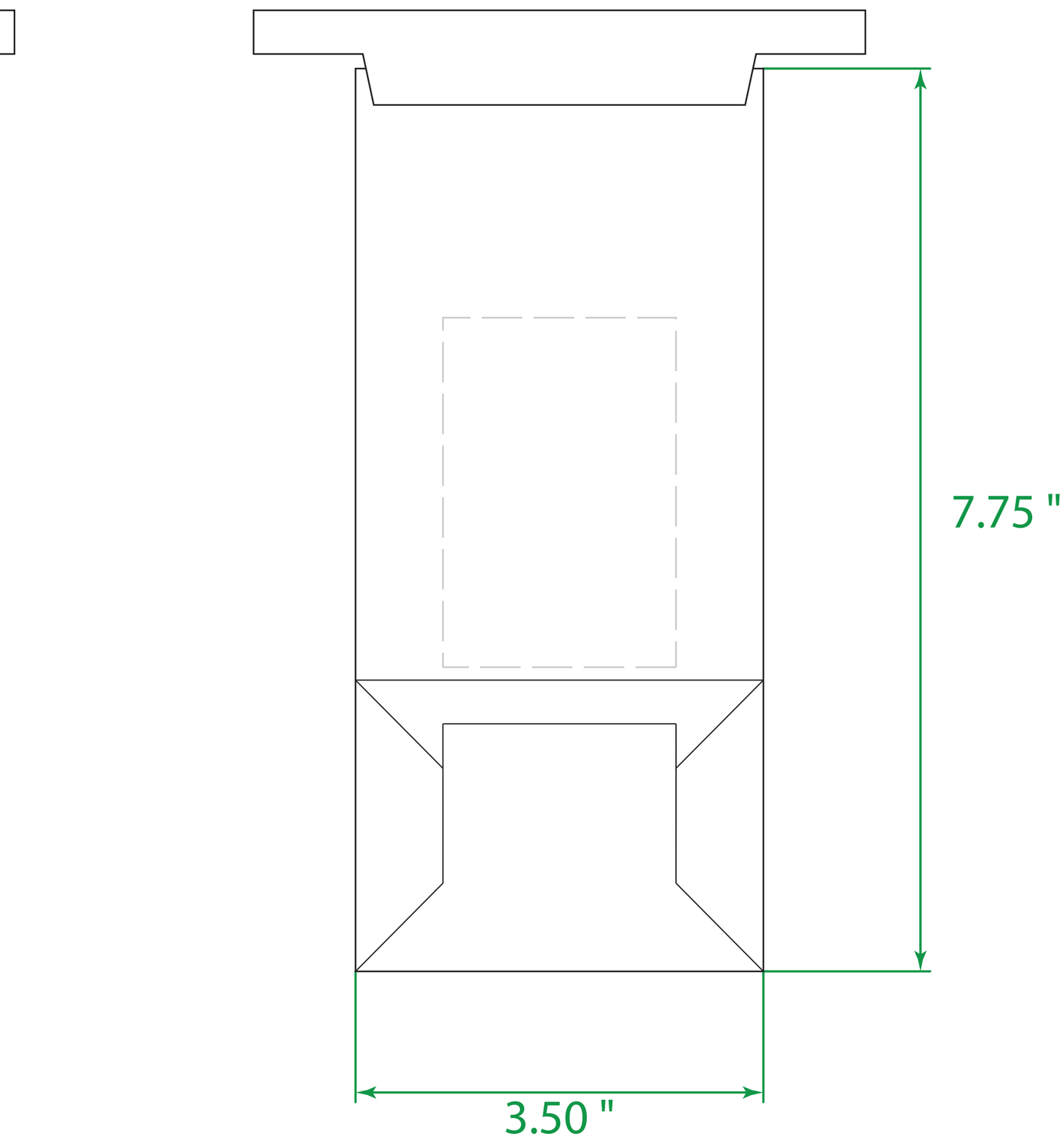

The colors on this page are RGB simulations of Pantone Colors. Actual colors may vary.